ICM30K - 3R1182

Made in India

PALAS

ISO9001-2015; ISO14001-2015

Applications

- ATM / CD
- Kiosk terminals
- Payment systems
- POS terminals
- Access control terminals
- Other ID terminals

Features

- High reliability and durability
- IC Card protocol handling for ISO and EMV Level 1 approved

Specifications	
IC Contact	ISO/IEC 7816-Part 1,2 and 3
	Protocol Handling (T=0 and 1)
	EMV 2000 ver 4.0 Level 1 approved
Magnetic Stripe	ISO/IEC 7810,7811 series, 7813
	Track 1, 2 and 3 Read only
Power requirement	+12 V DC / 0.4A (0.7A at peak 2ms)
Signal Interface	RS232C
Unit Life	More than 1,000,000 passes
Dimensions	80 mm(W) x 125 mm(D) x 50 mm(H)
Connector	3662-5002LCSC (3M)
Mass	165g approx

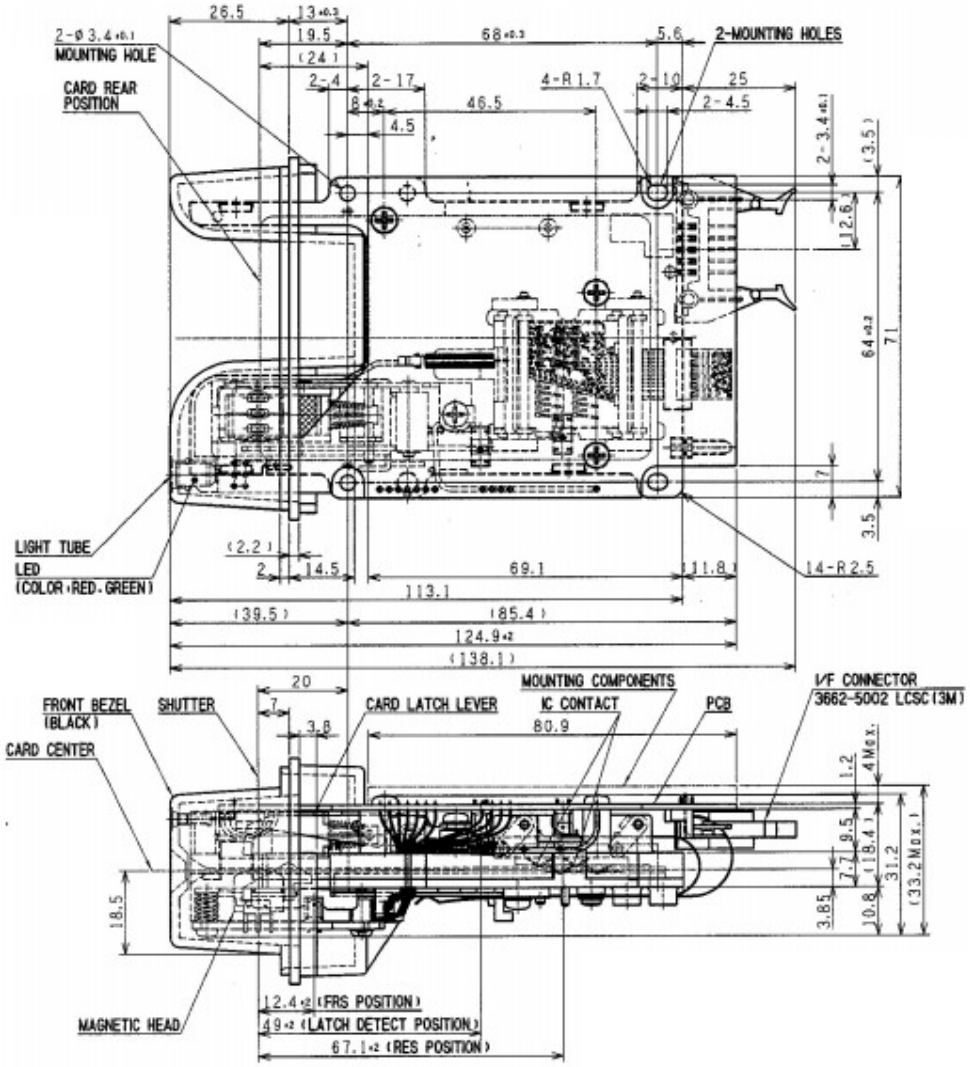

Sankyo

PALAS Software Pvt Ltd.

S-74 Okhla Industrial Area Phase 2, New Delhi 110020 INDIA **Web**: http://www.palas-india.com

Landline: +91-11-41708030 to 37; Mobile: +91-9811001546 to 52; WhatsApp: +91-98110 01546 **Email**: sales@palas-india.com

For more information, as many of us are now working from home, contact any of:

North: 80950-48512; 98110-01546 / 47 / 50 / 52; 98110-67817; South: 98110-01546 / 01548 West: 98110-01546